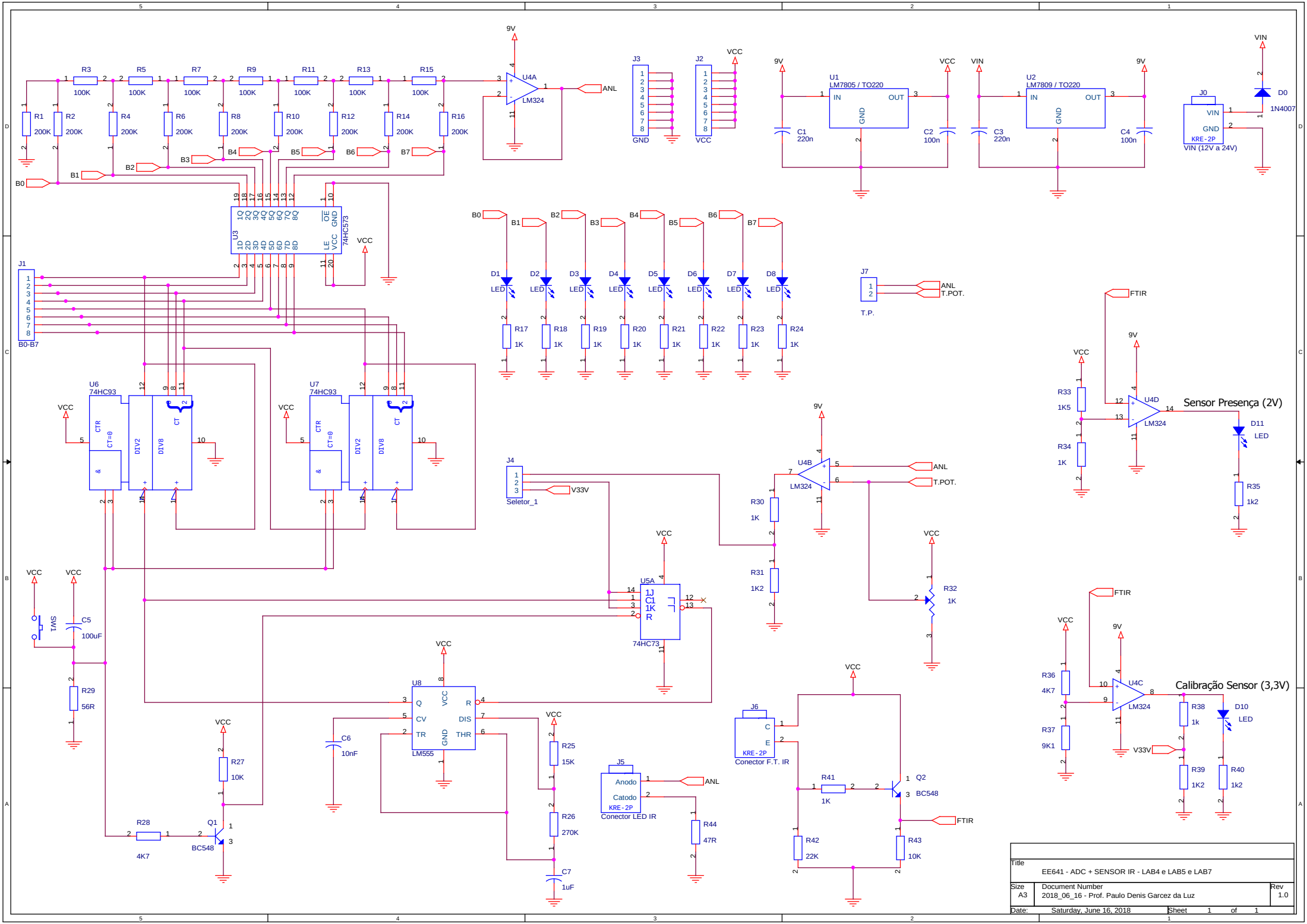

Title	EE641 - ADC + SENSOR IR - LAB4 e LAB5 e LAB7	
Size A3	Document Number 2018_06_16 - Prof. Paulo Denis Garcez da Luz	Rev 1.0
Date: Saturday, June 16, 2018	Sheet 1 of 1	